M57SH76-Txx

HIGH TORQUE Bipolar Stepping motor - 1,8°

Introduction

The M57SH76-Txx is a bipolar stepper motor with terminal-box, optionally equipped with a, incremental Push-Pull or Line-Driver incremental encoder, or a multiturn absolute encoder (WIEGAND technology, without battery).
The connection of the motor and the ecoder is made through M12 circular connectors.

Specifications

Model	Encoder	Current/ phase	Resistance/ phase	Inductance/ phase	Detent torque	Holding torque	Rotor inertia	Weight
M57SH76-T-C	-	2,8 A	1,2 Ω	5,4 mH	72 mNm	1,89 Nm	440 gcm²	1,1 Kg
M57SH76-TO0512P24C	Push-pull							
M57SH76-TO0512L05C	Line-driver							
M57SH76-TM1611S05C	SSI multiturn absolute							

Mechanical dimensions

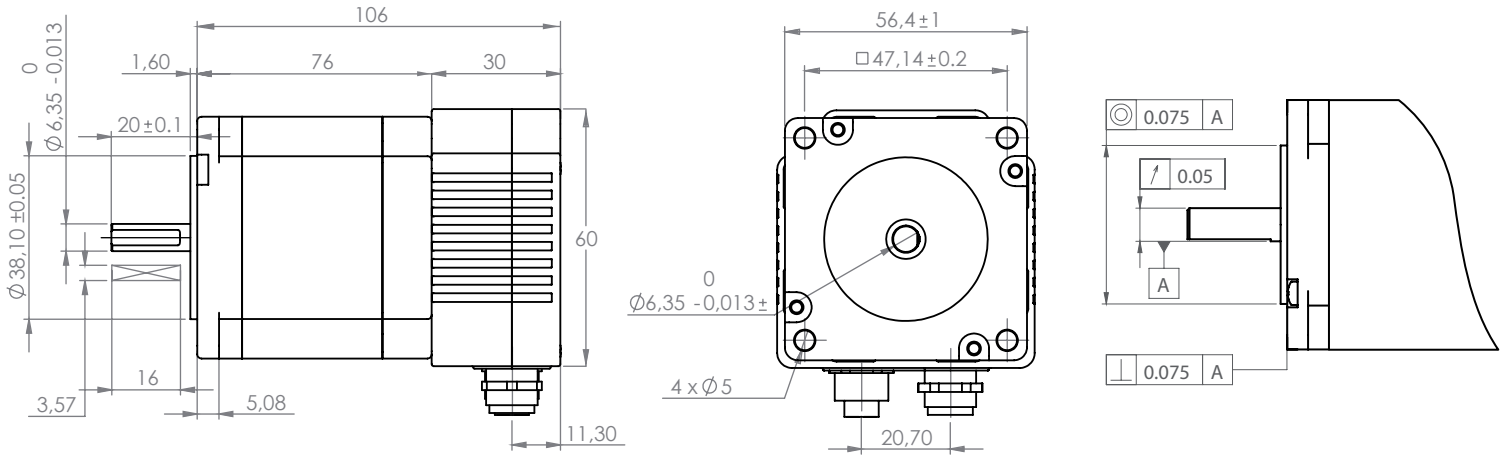

Speed vs Torque curve

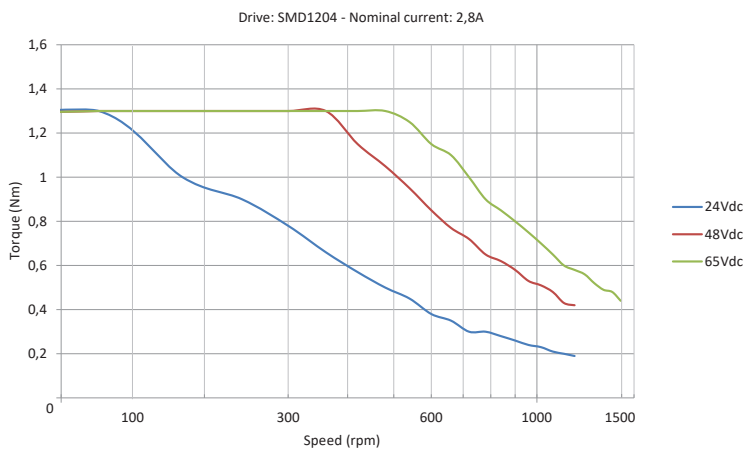

The torque curves are made with AEP torque transducer mod. MRT250NM

Motor characteristics

Step Angle	1,8° ± 5%
Insulation Class	B
Ambient Temperature	-20 °C .. +50 °C
Temperature Rise	80°C max (2 phase ON)
Insulation Resistance	100 MΩ min 500Vdc
Dielectric Strength	500 VAC FOR ONE MINUTE
Shaft Radial Play	0,02mm (with 450g load)
Shaft Axial Play	0,08mm (with 450g load)
Max Radial Force	75N (20mm FROM FRONT FLANGE)
Max Axial Force	10 N

Caution

Insert and tighten firmly the connectors before powering the motor. **Never disconnect any connector when powered.** Installation and maintenance must be carried out by qualified technicians only. The operator must have detailed information to be able to carry out this work.

- Unexpected dangers may be encountered
- An incorrect use may destroy this product and the connected equipments.

AEC s.r.l. Via Zambon, 33/A • Creazzo (Vicenza) Italy • www.aec-smd.it • aec@aec-smd.it • Tel. +39 0444 370088

M57SH76-Txx

HIGH TORQUE Bipolar Stepping motor - 1,8°

Connectors layout

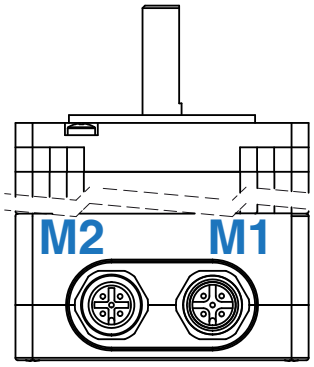

Incremental encoders

	Push-Pull	Line Driver
Vsupply	+24 Vdc	+5 Vdc
Imax (no load)	80 mA	
Imax	60 mA each channel	
Fout max	300 KHz	
Count/rev	512	
Protection degree	IP54	
Working temperature	-20 .. +80 °C	

Absolute encoder

Type	SSI Multiturn
Vsupply	+5 Vdc
Imax	100 mA
Frame total length	35
Initial ignored bits	8
Multiturn resolution	16 bit
Single turn resolution	11 bit
Alignment	Right
Data coding	Binary
Portection degree	IP54
Working temperature	-20 .. +80 °C

Motor connector

M1 — M12 5 Pin male

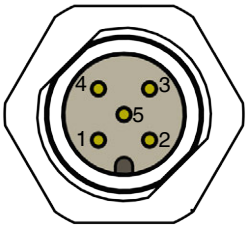

PIN	Description	Cable color matching
1	Phase A -	BROWN
2	Phase A	WHITE
3	Phase B -	BLUE
4	Phase B	BLACK
5	Shield	GREY

Push-Pull encoder connector

M2 — M12 5 Pin female

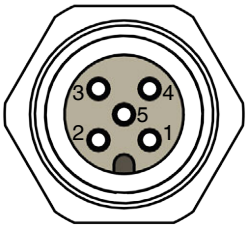

PIN	Description	Cable color matching
1	Vin (+24Vdc)	BROWN
2	Channel A	WHITE
3	Common	BLUE
4	Channel B	BLACK
5	Channel Z	GREY

Line-Driver encoder connector

M2 — M12 8 Pin male

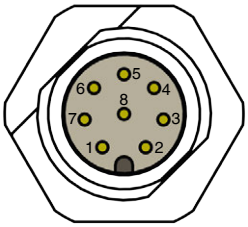

PIN	Description	Cable color matching
1	Channel Z +	WHITE
2	Vin (+5Vdc)	BROWN
3	Channel A +	GREEN
4	Channel A -	YELLOW
5	Channel B +	GREY
6	Channel B -	PINK
7	Common	BLUE
8	Channel Z -	RED

Absolute encoder connector

M2 — M12 8 Pin Male

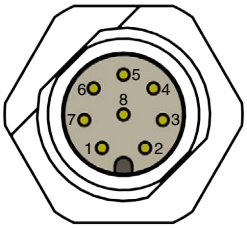

PIN	Description	Cable color matching
1	Common	WHITE
2	Vin (+5Vdc)	BROWN
3	Clock +	GREEN
4	Clock -	YELOOW
5	Data +	GREY
6	Data -	PINK
7	Preset	BLUE
8	Complement	RED